Eye and Responses machine Template

TOP

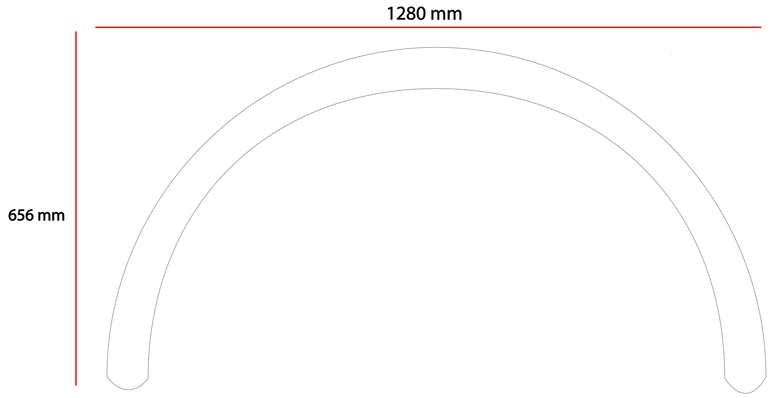

top bottom

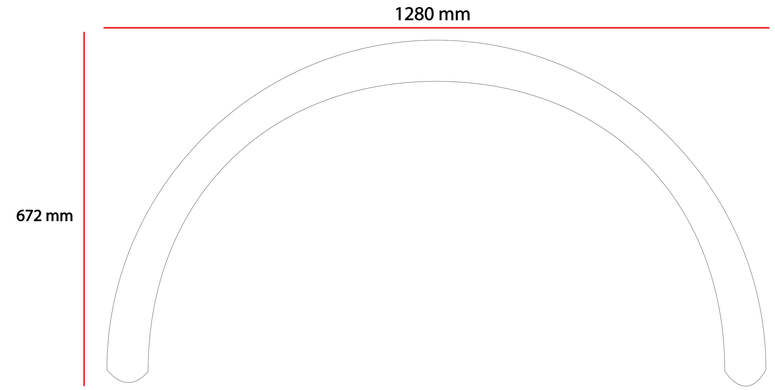

BASED

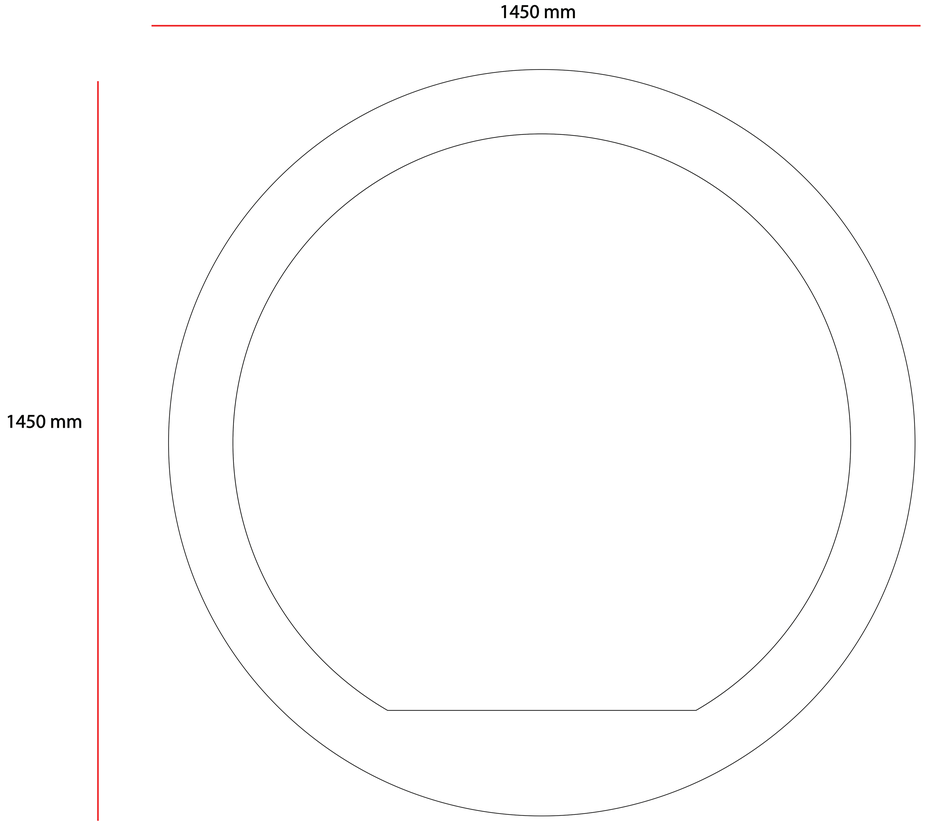

top width

FRONT

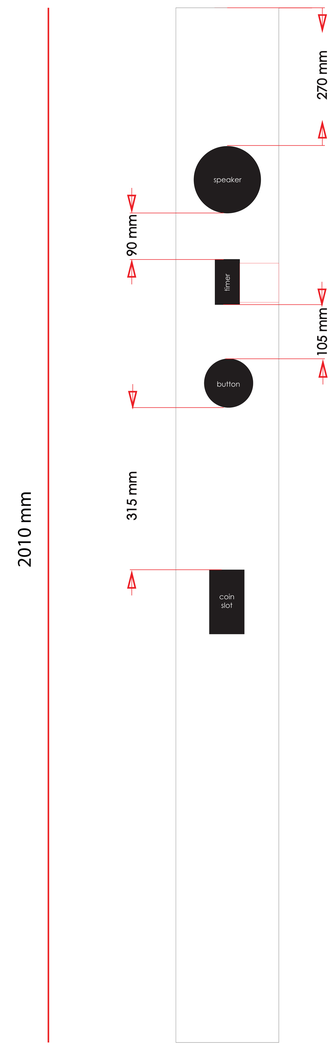

REAR

SIDE

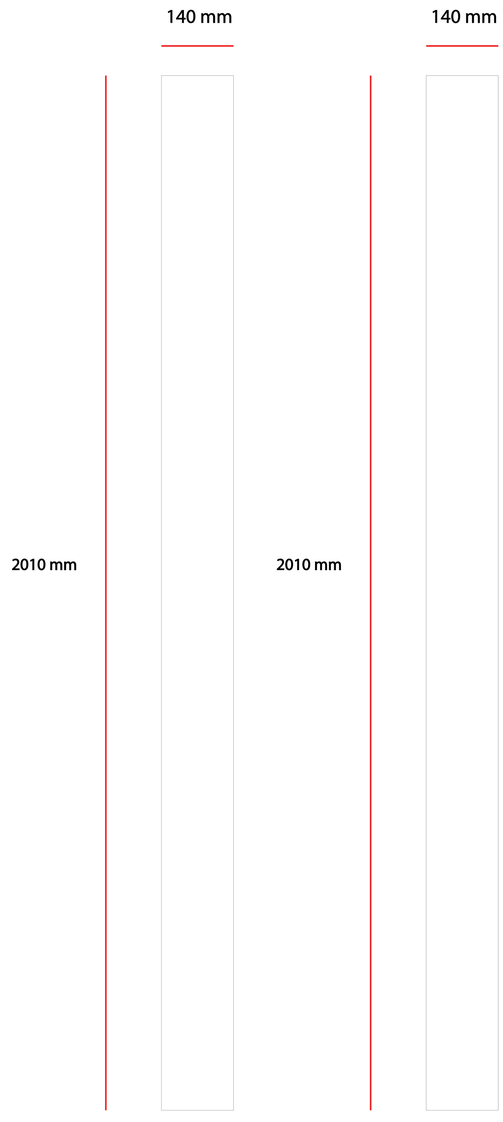

BASED WIDTH OUTSIDE

BASED WIDTH INSIDE